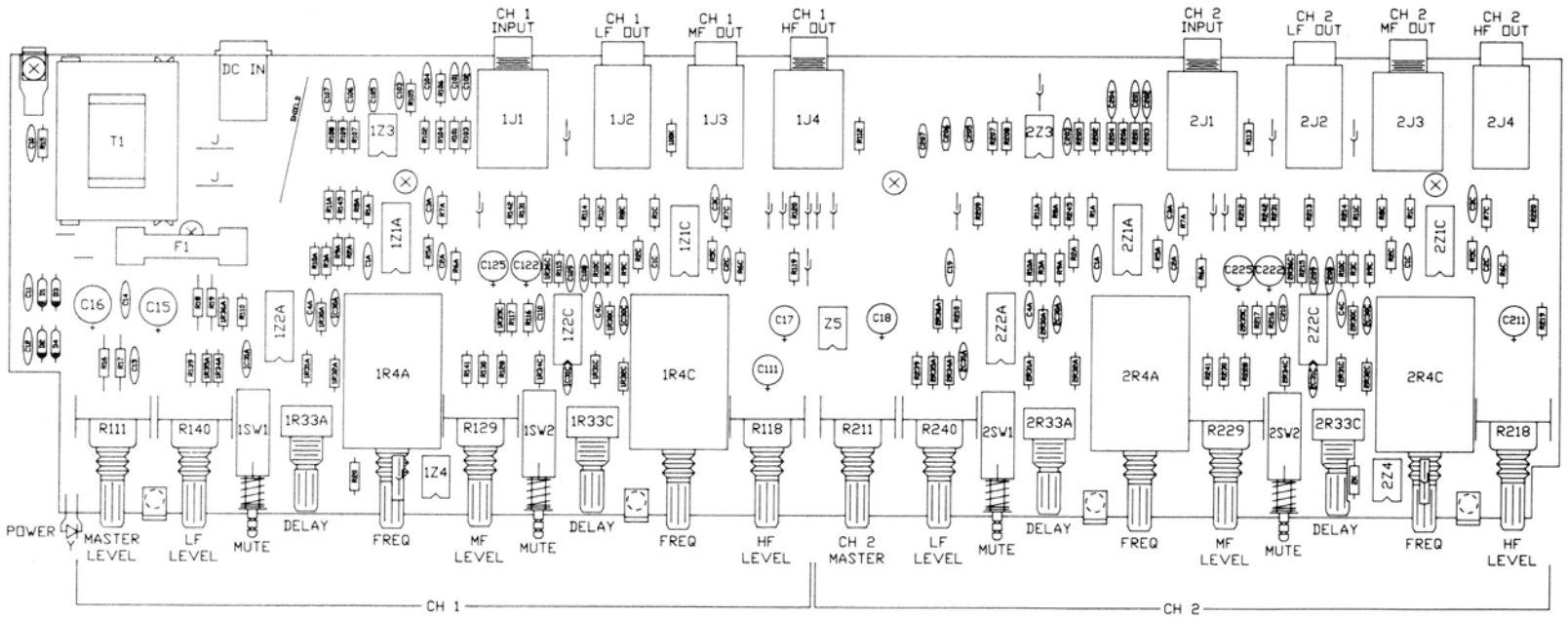

NOTES-UNLESS OTHERWISE SPECIFIED

1. PINOUT OF 1J1, 1J4, 2J1, 2J3 IS:

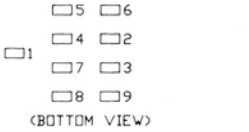

(BOTTOM VIEW)

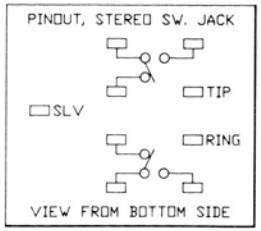

REVISIONS	REV. E	ACTION REMOVED Q1, Q2, Q3, Q101, Q102, Q103, Q201, Q202, Q203, R21, R22, R23, C20	DATE 05APR88	APPROVED AWC
DRAWN S. TURNIDGE	DATE 22APR87	CHECKED A. CLAXTON DATE 22APR87	SHEET 1 OF 1	DO NOT SCALE DRAWING

RANE

Corp. 10802 47th Avenue West, Everett
WA 98204-3400 (206) 355-6000

TITLE AC 23 ASSY

DRW. NO. 522-012

REV. E

DETAIL 1: TYPICAL LINKWITZ-RILEY CROSSOVER CIRCUIT

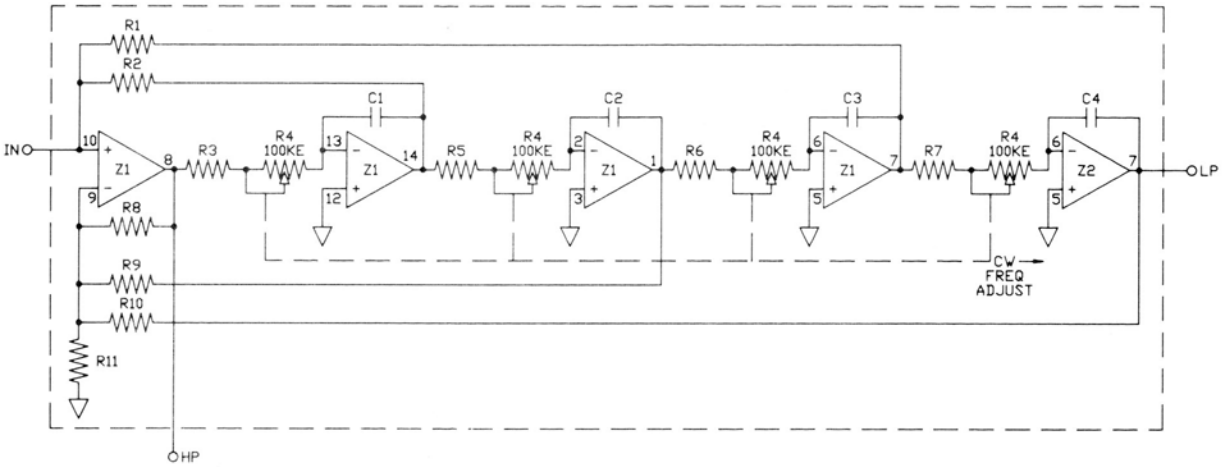

DETAIL 2: TYPICAL DELAY

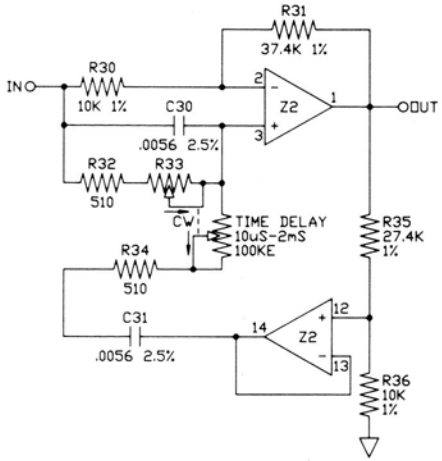

POWER SUPPLY

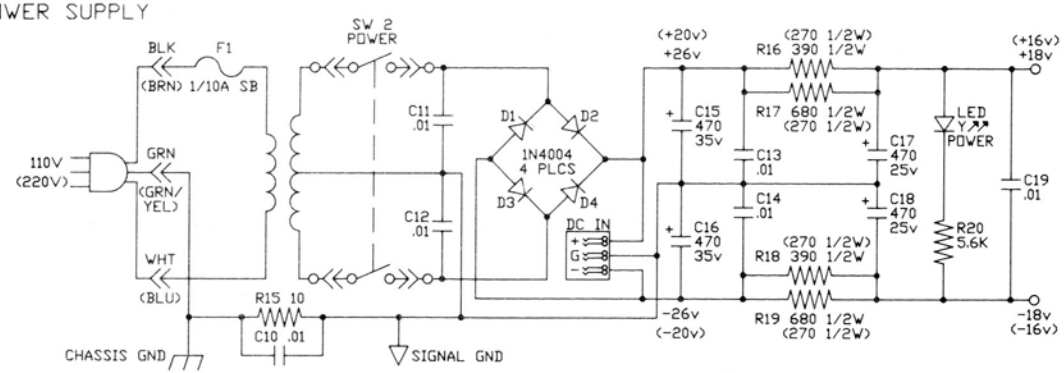

AC22 SHOWN, AC23 SAME EXCEPT WHERE NOTED BY PARENTHESIS.

DETAIL 3: TYPICAL SUBSONIC FILTER

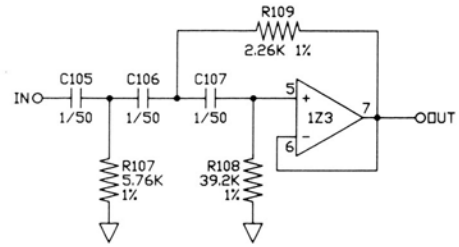

CHANNEL 1 SHOWN

DETAIL 4: TYPICAL AC23 ULTRASONIC FILTER

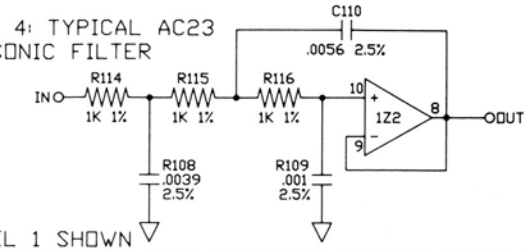

CHANNEL 1 SHOWN

NOTES (UNLESS OTHERWISE NOTED)

1. ALL RES 1/4W; 1%: METAL FILM; 5%: CARBON FILM.
2. ALL CAPS IN uF/100
3. POWER SUPPLY CONNECTIONS:

	POS SUP	NEG SUP
SING	7	4
DUAL	8	4
QUAD	4	11

4. ALL SWs SHOWN IN THEIR 'OUT' OR 'OFF' POSITION
5. IC TYPES: Z3, Z4, Z5 = 4072
   Z1, Z2 = 4156

COMPONENT DESIGNATION PROTOCOL:

COMMON PARTS NUMBERED 1-99
CH1 PARTS- EITHER PREFIX '1' OR 100-199
CH2 PARTS- EITHER PREFIX '2' OR 200-299
ALL VALUES SUFFIXED 'A' REFER TO FREQ RANGE 70Hz-1kHz
ALL VALUES SUFFIXED 'B' REFER TO FREQ RANGE 75Hz-3.6kHz
ALL VALUES SUFFIXED 'C' REFER TO FREQ RANGE 450Hz-7kHz
EXAMPLE: '1R1A' -CHANNEL 1
-FREQ RANGE 70Hz-1kHz

REVISIONS	REV.	ACTION	DATE	APPROVED
DRAWN S. TURNIDGE	DATE 18APR88	CHECKED A. CLAXTON	DATE 21APR88	SHEET 2 OF 2

DO NOT SCALE DRAWING

RANE
Corp. 10802 47th Avenue West, Everett
WA 98204-3400 (206) 355-6000

TITLE POWER SUPPLY AND DETAILS AC22 & AC23

DRW. NO. 521-011

REV. G

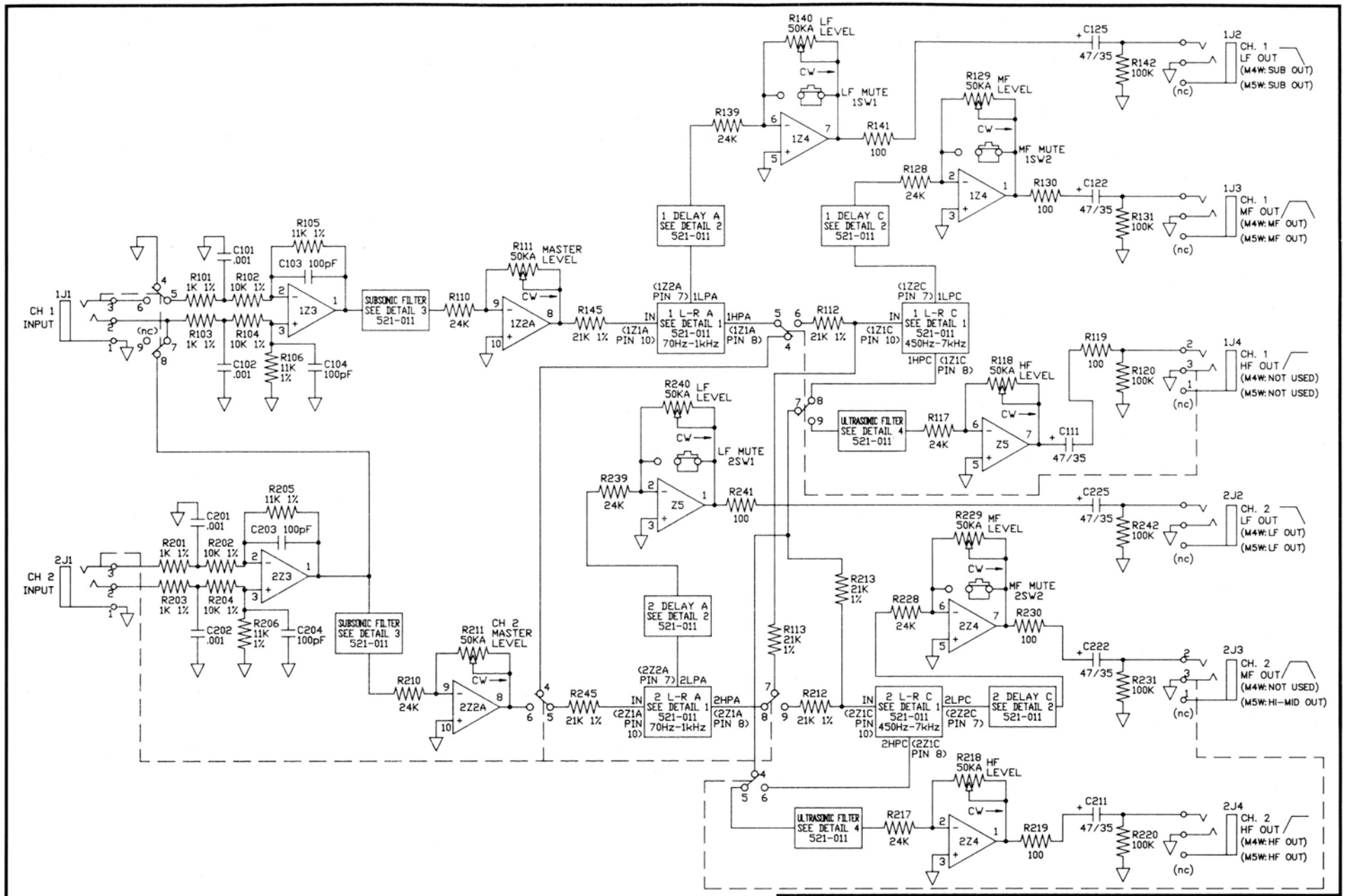

REVISIONS	REV.	ACTION	DATE	APPROVED
DRAWN S. TURNIDGE	DATE 14APR88	CHECKED A. CLAXTON DATE 21APR88	SHEET 1 OF 2	DO NOT SCALE DRAWING

RANE
Corp. 10802 47th Avenue West, Everett
WA 98204-3400 (206) 355-6000

TITLE
AC 23 SCHEMATIC

DRW. NO. 521-009

REV. E